ECE101F19 Quiz 7, Nov. 14, 2019

Name_____ Student ID_____

For the RL circuit below, find i(t) for t > 0 after the switch was positioned to terminal 2 at t=0. Assume L= 10 mH. (Hint: Find the initial current i(0-), and also i(∞), and also the time constant. Be mindful of the sign, + or – for i(0-) and i(∞).)

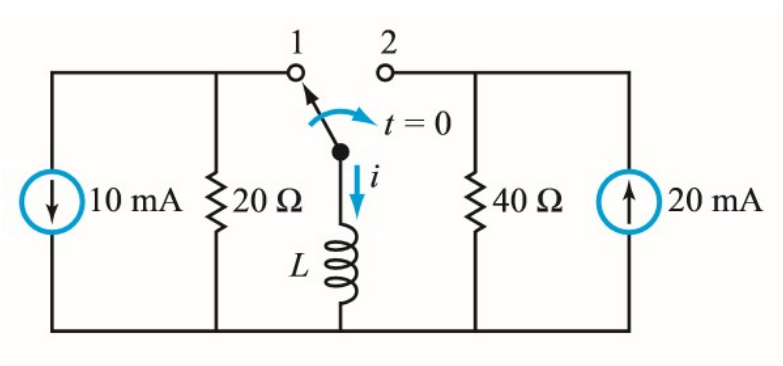

(1)(2 points) Find i(0-) and i(∞).

(2)(3 points) Formulate the differential equation for i(t) for t > 0.

(3)(5 points) Write down the solution i(t) and check whether its values at t = 0- and t = ∞(2)